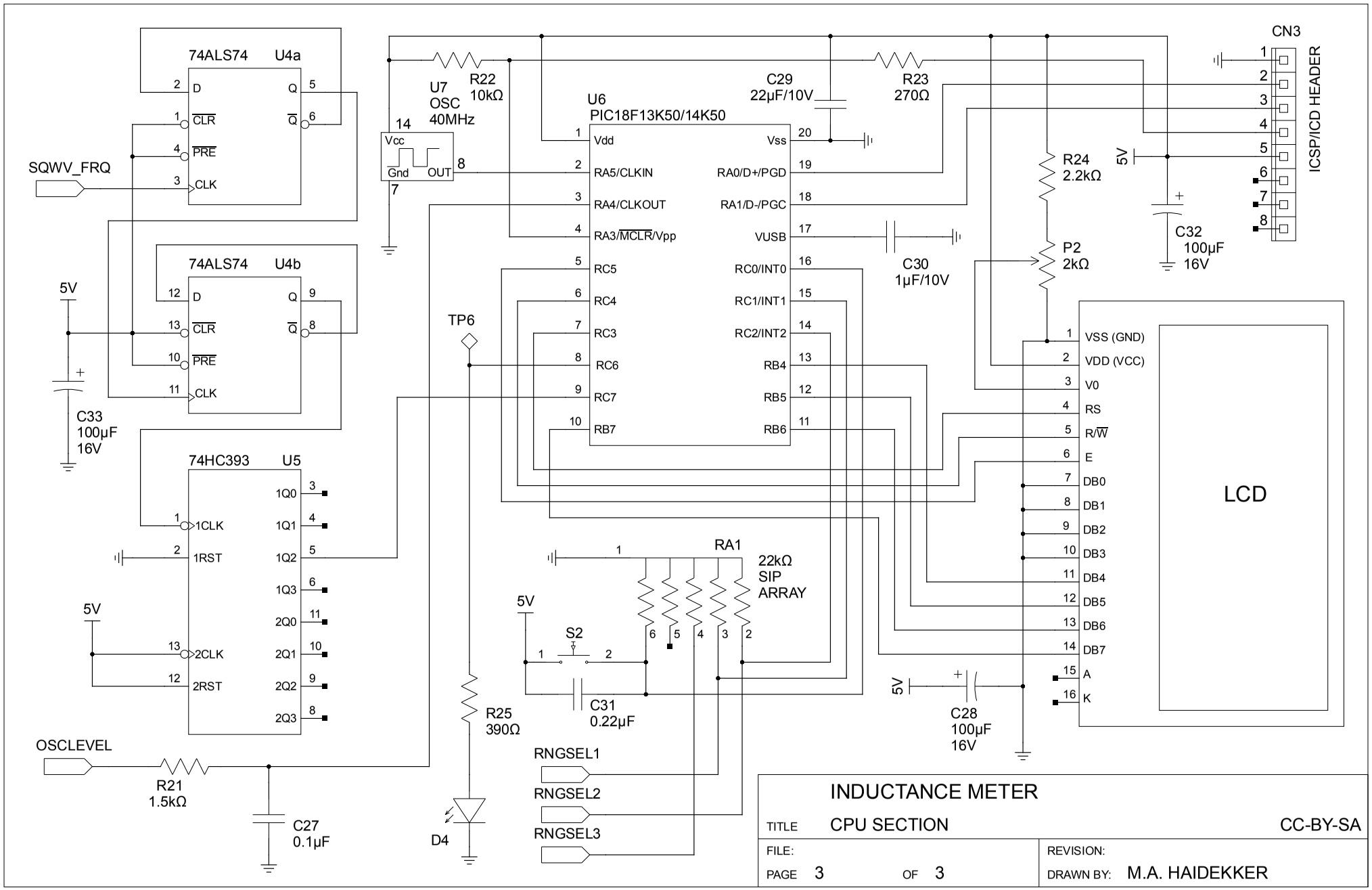
74ALS74 U4a
D
CLR
PRE
CLK
Q
Q̄
SQWV_FRQ
74ALS74 U4b
5V
C33
100µF
16V
74HC393 U5
1CLK
1RST
2CLK
2RST
1Q0
1Q1
1Q2
1Q3
2Q0
2Q1
2Q2
2Q3
OSCLEVEL
R21
1.5kΩ
C27
0.1µF
U7
OSC
40MHz
Vcc
Gnd
OUT
R22
10kΩ
U6
PIC18F13K50/14K50
Vdd
RA5/CLKIN
RA4/CLKOUT
RA3/MCLR/Vpp
RC5
RC4
RC3
RC6
RC7
RB7
Vss
RA0/D+/PGD
RA1/D-/PGC
VUSB
RC0/INT0
RC1/INT1
RC2/INT2
RB4
RB5
RB6
C29
22µF/10V
R23
270Ω
C30
1µF/10V
TP6
R25
390Ω
D4
RA1
22kΩ
SIP
ARRAY
S2
C31
0.22µF
RNGSEL1
RNGSEL2
RNGSEL3
R24
2.2kΩ
P2
2kΩ
C28
100µF
16V
C32
100µF
16V
CN3
ICSP/ICD HEADER
VSS (GND)
VDD (VCC)
V0
RS
R/W
E
DB0
DB1
DB2
DB3
DB4
DB5
DB6
DB7
A
K
LCD
INDUCTANCE METER
TITLE
CPU SECTION
CC-BY-SA
FILE:
PAGE 3 OF 3
REVISION:
DRAWN BY: M.A. HAIDEKKER